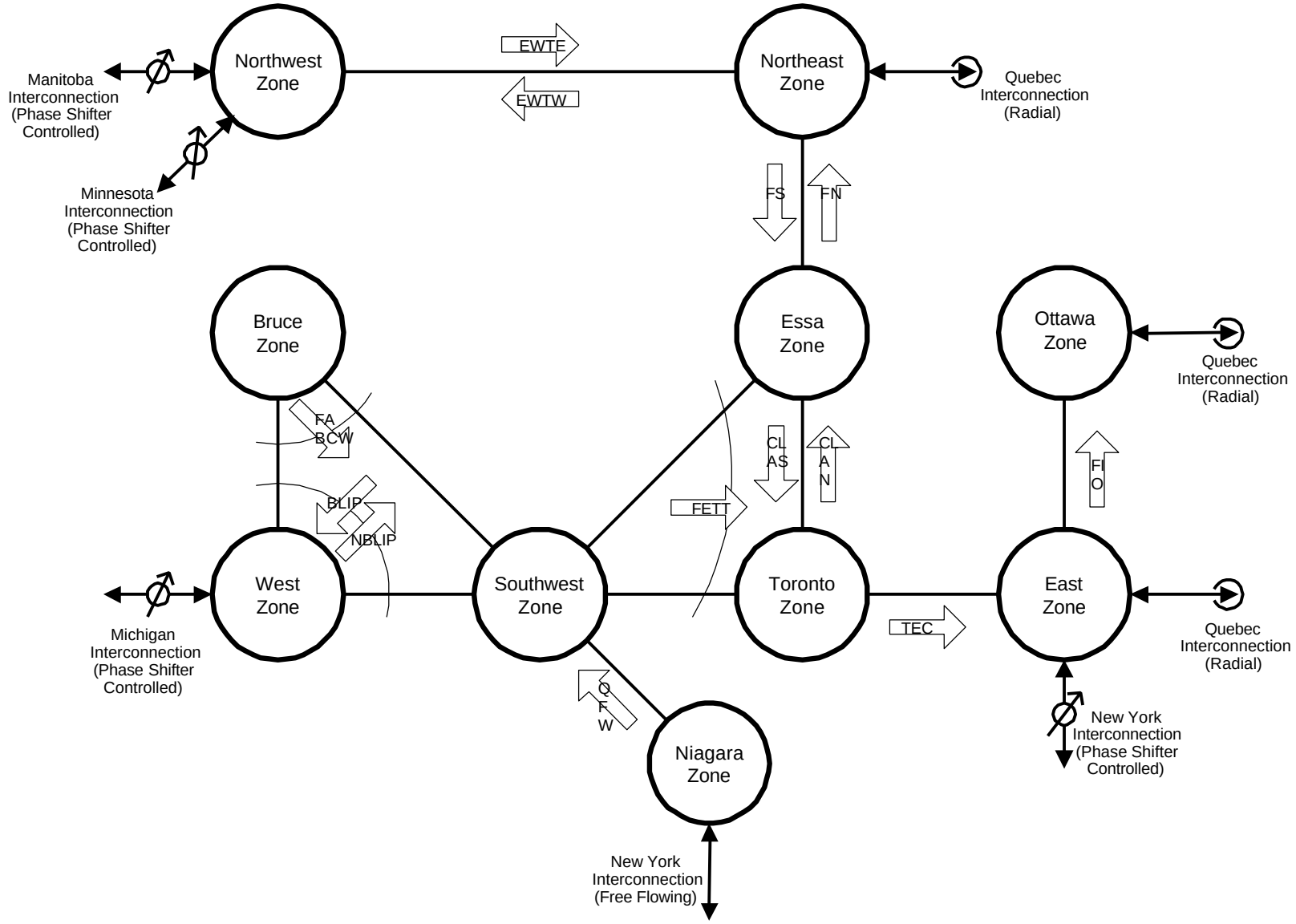# Ontario's Internal Zones, Internal Interfaces and External Interconnections